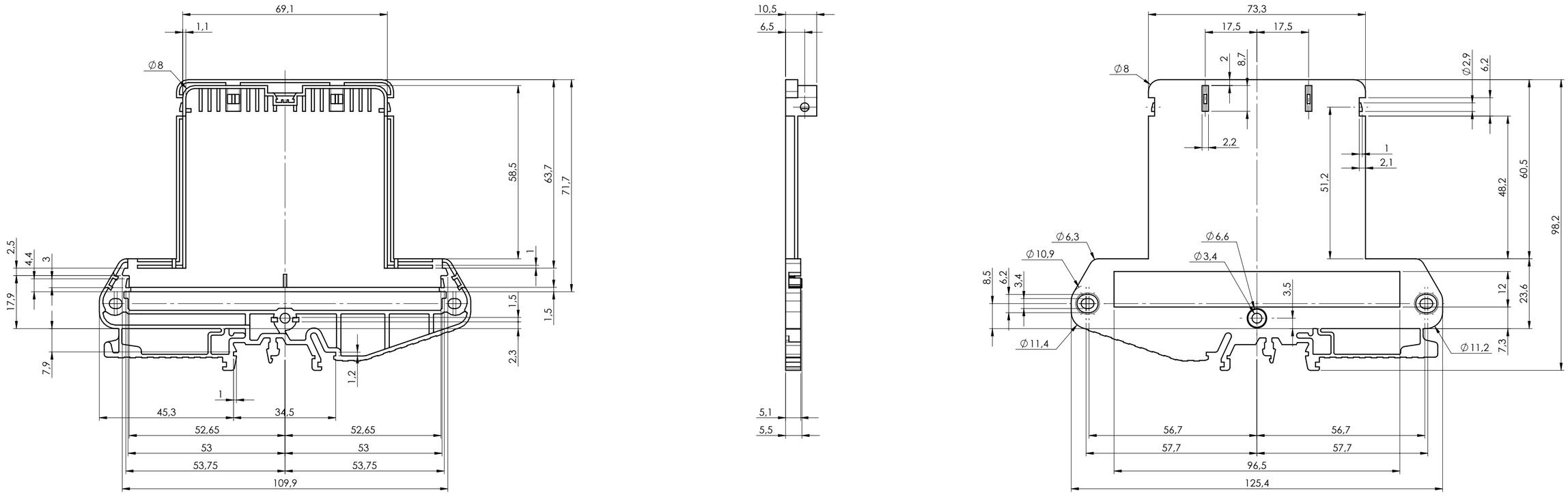

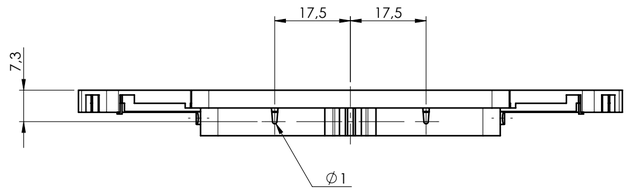

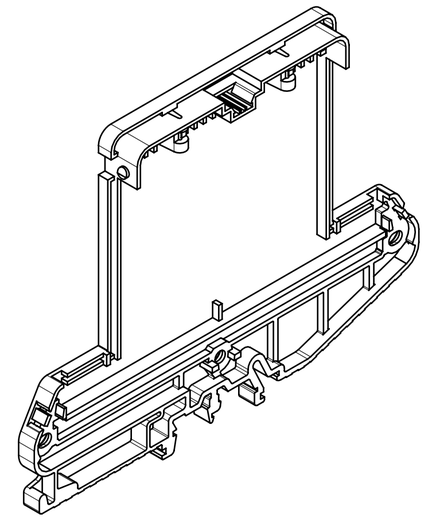

Environmental conditions of the quote survey:
Temperature: 23°C
Humidity: 50%

General Tolerance UNI EN 22768/1 Media (m)					Sheet:
from 0.5 to 3	from 3 to 6	from 6 to 30	from 30 to 120	from 120 to 400	1
± 0.1	± 0.1	± 0.2	± 0.3	± 0.5	
Scale: 1:1	Drawed: D.S.	Checked: R.N.	Date: 22/10/2024	Material: Materiale <non specificato>	Process:
Dimension in mm	The present drawing cannot be reproduced or comunicated to 3d parties, even partially, without the authorization of ITALTRONIC Sr. Italtronic reserves to protect its own rights according to the law.	Derived from:		Weight: 107.18 gr	Cod. Mold: --

italtronic
enclosures for electronics
italtronic.com

Description:
CHIUSURA LATERALE SUPPORT ONE SX PROTEZIONE 73 MM
--

Drawing nr.: **2_170_00076**

Rev.: - A2