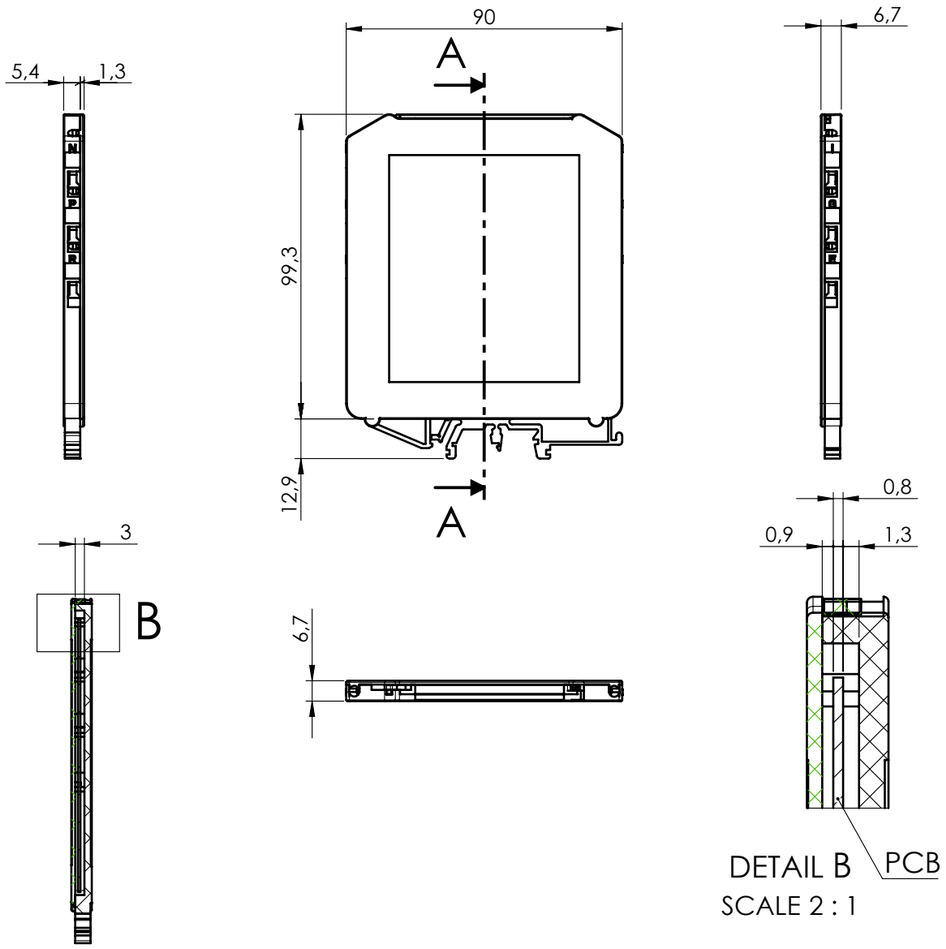

SECTION A-A

COVER

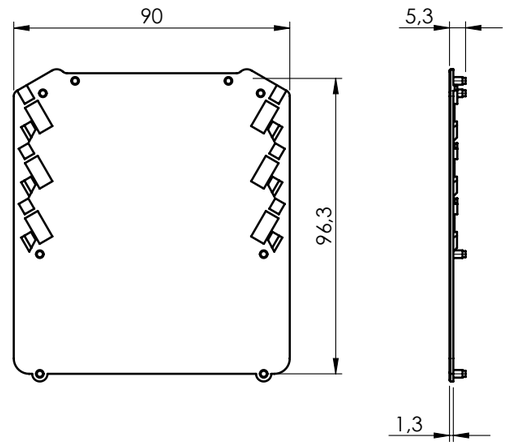

BELT-COVER

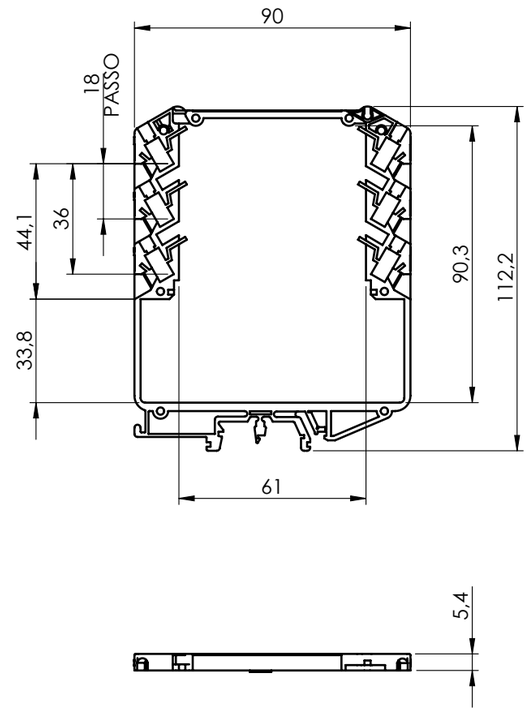

EXPLODED

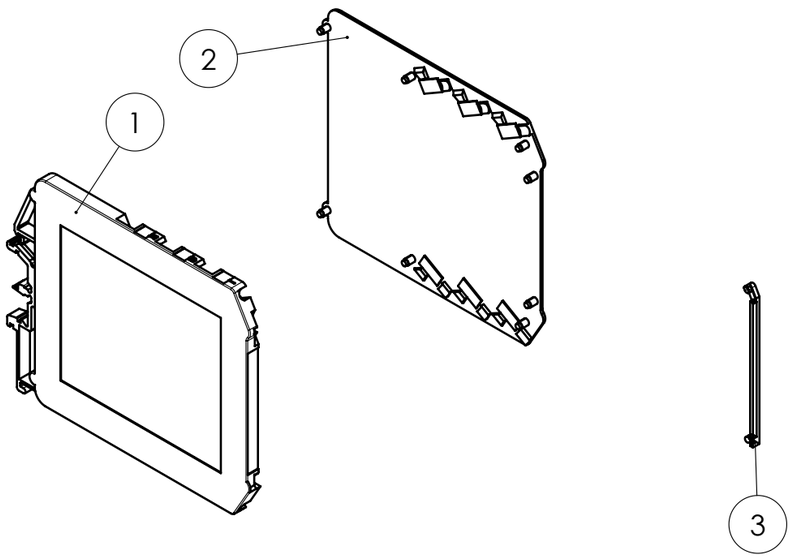

FRONT PANEL

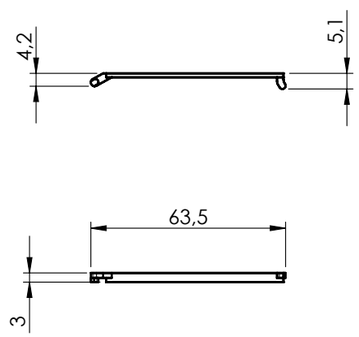

General information:
- Mounting rail like EN 60715: TH 35-7.5 or TH 35-15
- Recommended PCB outline on www.italtronic.com

RIF.	Q.TY	DRAWING	DESCRIPTION
1	1	2_160_00018	BASE GUIDEBOX 5,25MM P6
2	1	2_160_00020	COVER GUIDEBOX CLOSED 1,25MM P6
3	1	2_160_00019	SIDE HINGED PANEL GUIDEBOX 6,5MM TRANSPARENT

General Tolerance UNI EN 22768/1 Media (m)					Sheet:
from 0.5 to 3	from 3 to 6	from 6 to 30	from 30 to 120	from 120 to 400	1
± 0.1	± 0.1	± 0.2	± 0.3	± 0.5	

Scale:	IM:	Drawed:	Checked:	Date:	Material:	Process:
1:2	--	F.E.	R.N.	20/02/2026		

Dimension in mm	The present drawing cannot be reproduced or comunicated to 3d parties, even partially, without the authorization of ITALTRONIC Srl. Italtronic reserves to protect its own rights according to the law.	Replaces the:	Derived from:	Weight:	Cod. Mold:
		G-06900-00		gr	--

italtronic
enclosures for electronics
italtronic.com

Description:
KIT CONTENITORE GUIDEBOX 6,5MM P6
KIT ENCLOSURE GUIDEBOX 6,5MM P6

Drawing nr.: **3_160_00070**

Rev.: 00

A3

PCB 1
- PER SINGOLO PCB -

SOLDER SIDE

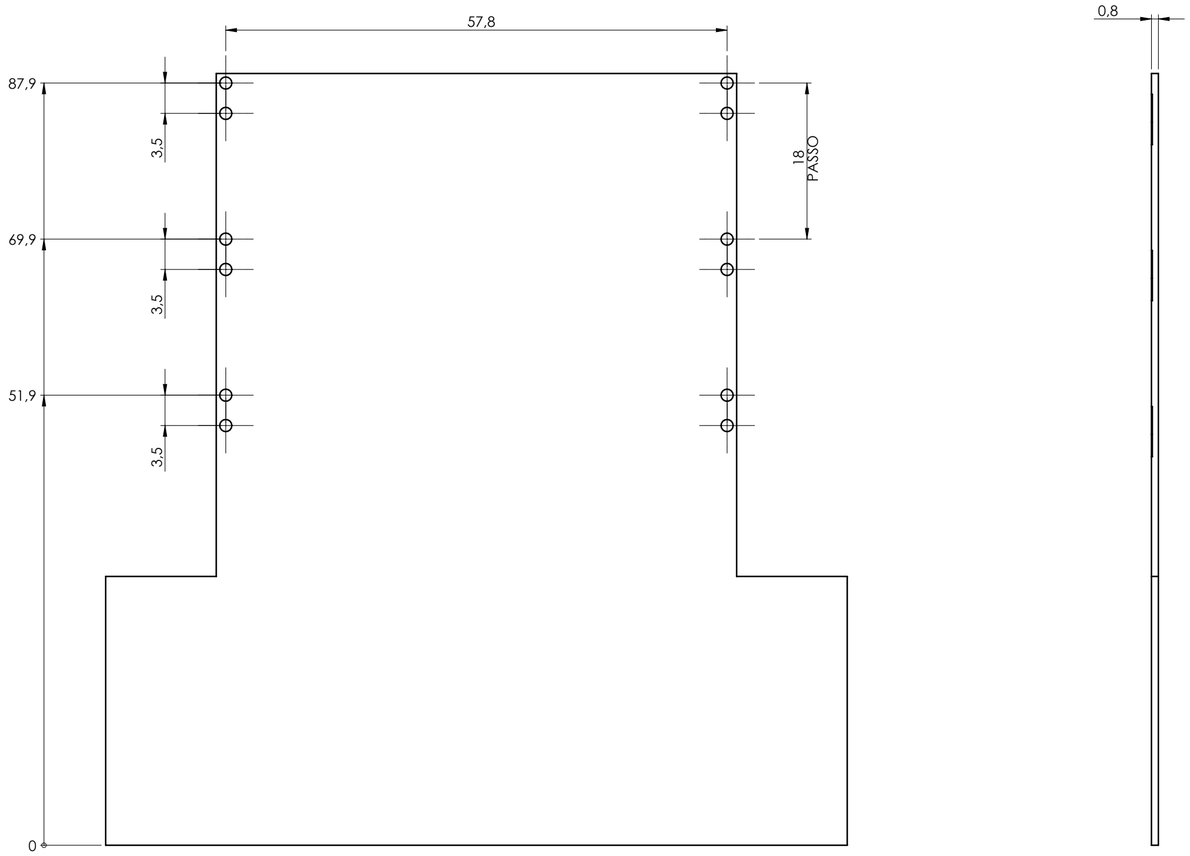

COMPONENT SIDE

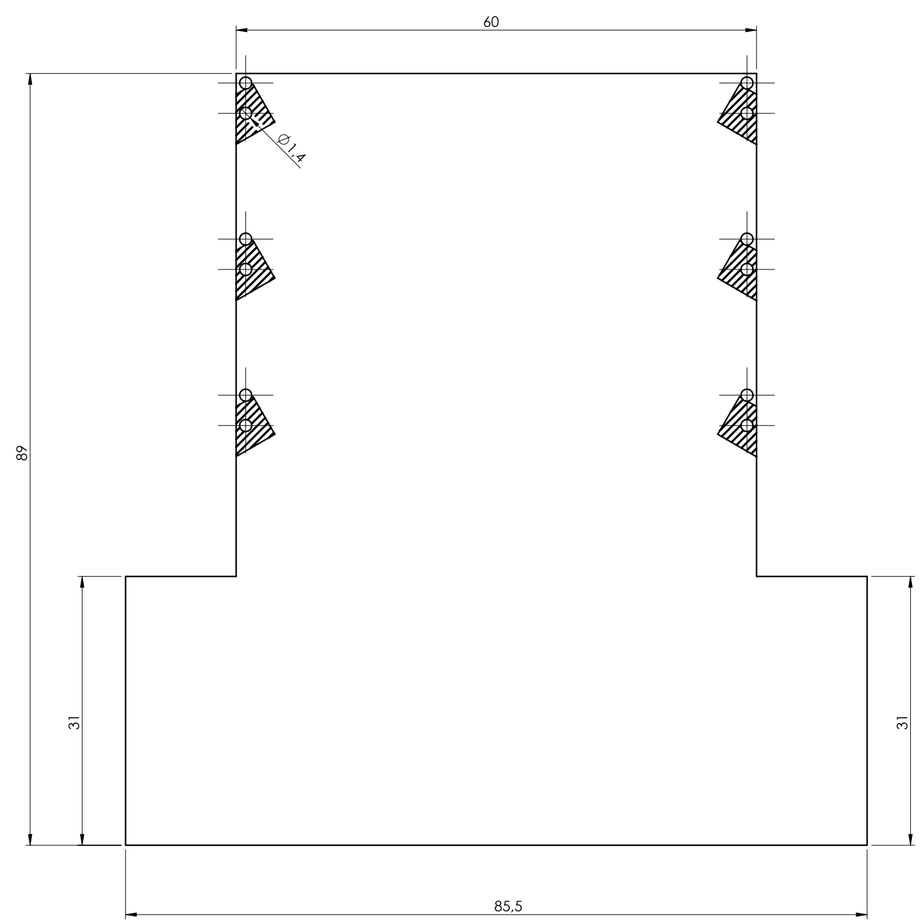

NO COMPONENTS AREA

General Tolerance UNI EN 22768/1 Media (m)					Sheet:
from 0.5 to 3	from 3 to 6	from 6 to 30	from 30 to 120	from 120 to 400	PCB
± 0.1	± 0.1	± 0.2	± 0.3	± 0.5	
Scale: 2:1	Drawed: F.E.	Checked: R.N.	Date: 20/02/2026	Material:	Process:
Dimension in mm	The present drawing cannot be reproduced or communicated to 3d parties, even partially, without the authorization of ITALTRONIC SE. Italtronic reserves to protect its own rights according to the law.	Derived from:		Weight: gr	Cod. Mold: --

italtronic
enclosures for electronics
italtronic.com

Description:
KIT CONTENITORE GUIDEBOX 6,5MM P6
KIT ENCLOSURE GUIDEBOX 6,5MM P6

Drawing nr.: **3_160_00070**

Rev.: 00

A2