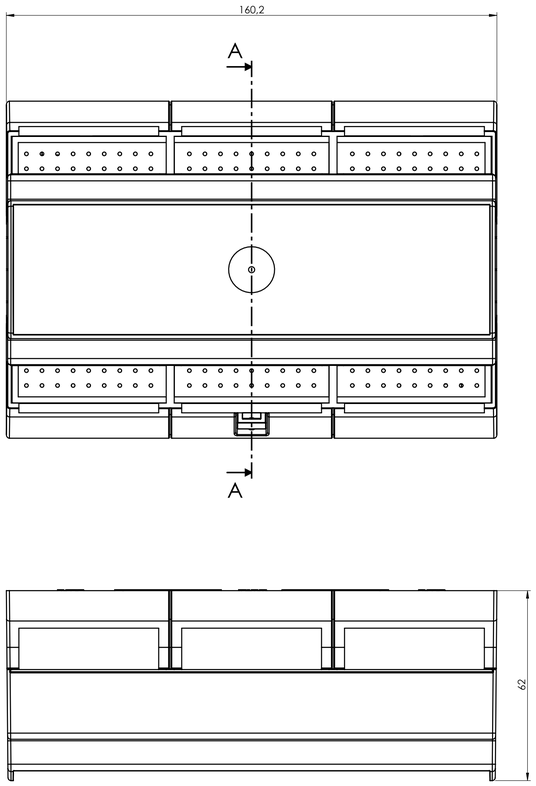

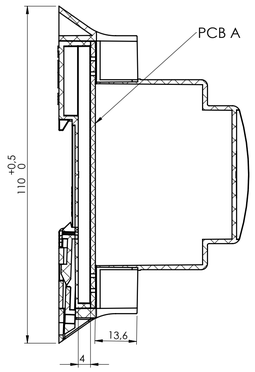

SECTION A-A

BODY ENCLOSURE

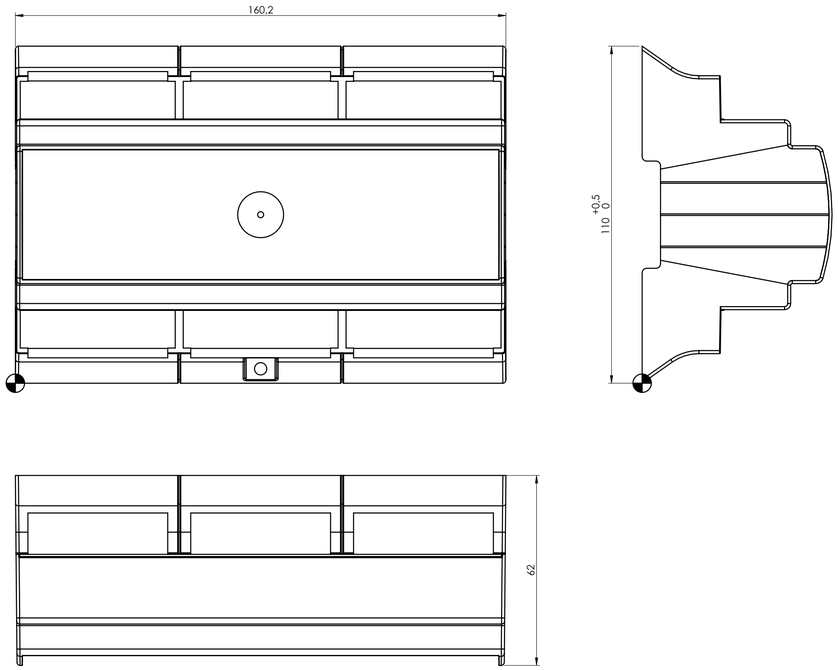

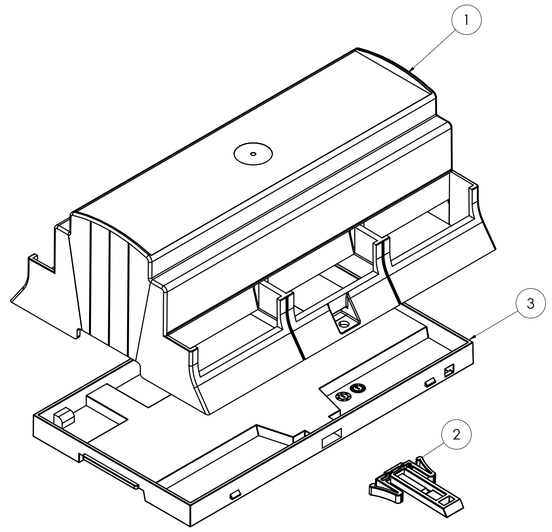

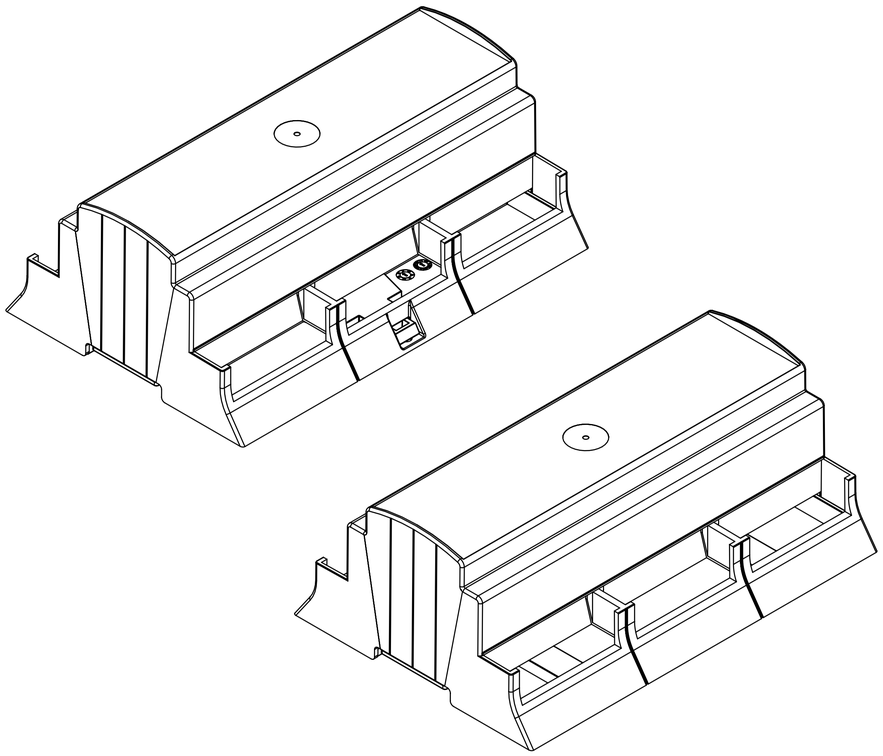

BASE

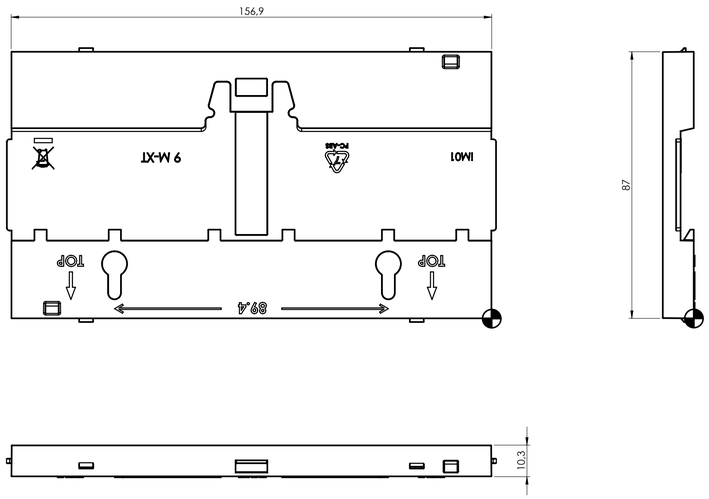

HOOK

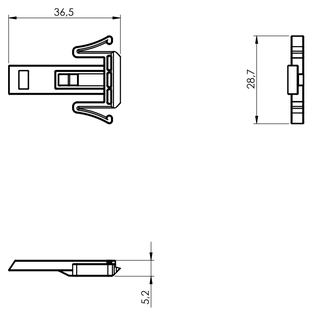

General information:
- Workpiece zero point for mechanical processing
- Minimum recommended radius for machining = R1.0 mm
- Mounting rail like EN 60715: TH 35-15
- Recommended PCB outline on www.italtronic.com

RIF.	Q.TY	DRAWING	DESCRIPTION
1	1	2_250_03641	BODY ENCLOSURE MODULBOX XT 9MH53V-A
2	1	2_250_00072	HOOK FOR MODULBOX XT-XTS
3	1	2_250_00086	BASE 9M MODULBOX XT-XTS

General Tolerance UNI EN 22768/1 Media (m)					Sheet:
from 0,5 to 3	from 3 to 6	from 6 to 30	from 30 to 120	from 120 to 400	1
± 0,1	± 0,1	± 0,2	± 0,3	± 0,5	

Scale:	Drawed:	Checked:	Date:	Material:	Process:
1:1	R.N.	R.N.	04/02/2021	PC/ABS	INJECTION

Dimension in mm	Derived from:	Weight:	Cod. Mold:
	- - -	40,05 gr	ST.0512500

The present drawing cannot be reproduced or communicated to 3r party without our written authorization of ITALTRONIC SRL. Italtronic reserves to protect its own rights according to the laws

italtronic
enclosures for electronics
italtronic.com

Description:
BASE 9M MODULBOX XT-XTS
BASE 9M MODULBOX XT-XTS

Drawing nr.: **2_250_00086**

Rev.: 02

A1

Max height of the terminal:
Modulbox XT/XTS: 18.5 mm
Modulbox ONE: 20 mm

PCB A

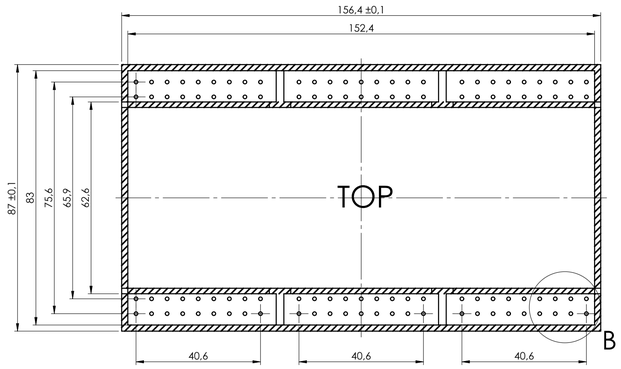

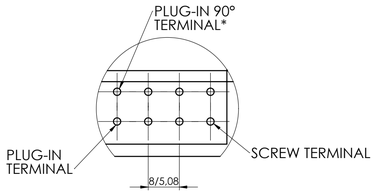

DETAIL B
SCALE 2 : 1

NO COMPONENTS AREA

General Tolerance UNI EN 22768/1 Media (m)					Sheet:
from 0,5 to 3	from 3 to 6	from 6 to 30	from 30 to 120	from 120 to 400	PCB
± 0,1	± 0,1	± 0,2	± 0,3	± 0,5	
Scale: 1:1	Drawed: R.N.	Checked: R.N.	Date: 04/02/2021	Material: PC/ABS	Process: INJECTION
Dimension in mm	The present drawing cannot be reproduced or communicated to 3d parties without our written authorization of ITALTRONIC INDUSTRIE reserves to protect its own rights according to the laws	Derived from: - - -		Weight: 40,05 gr	Cod. Mold: ST.0512500

italtronic
enclosures for electronics
italtronic.com

Description:
BASE 9M MODULBOX XT-XTS
BASE 9M MODULBOX XT-XTS

Drawing nr.: **2_250_00086**

Rev.: 02 A1