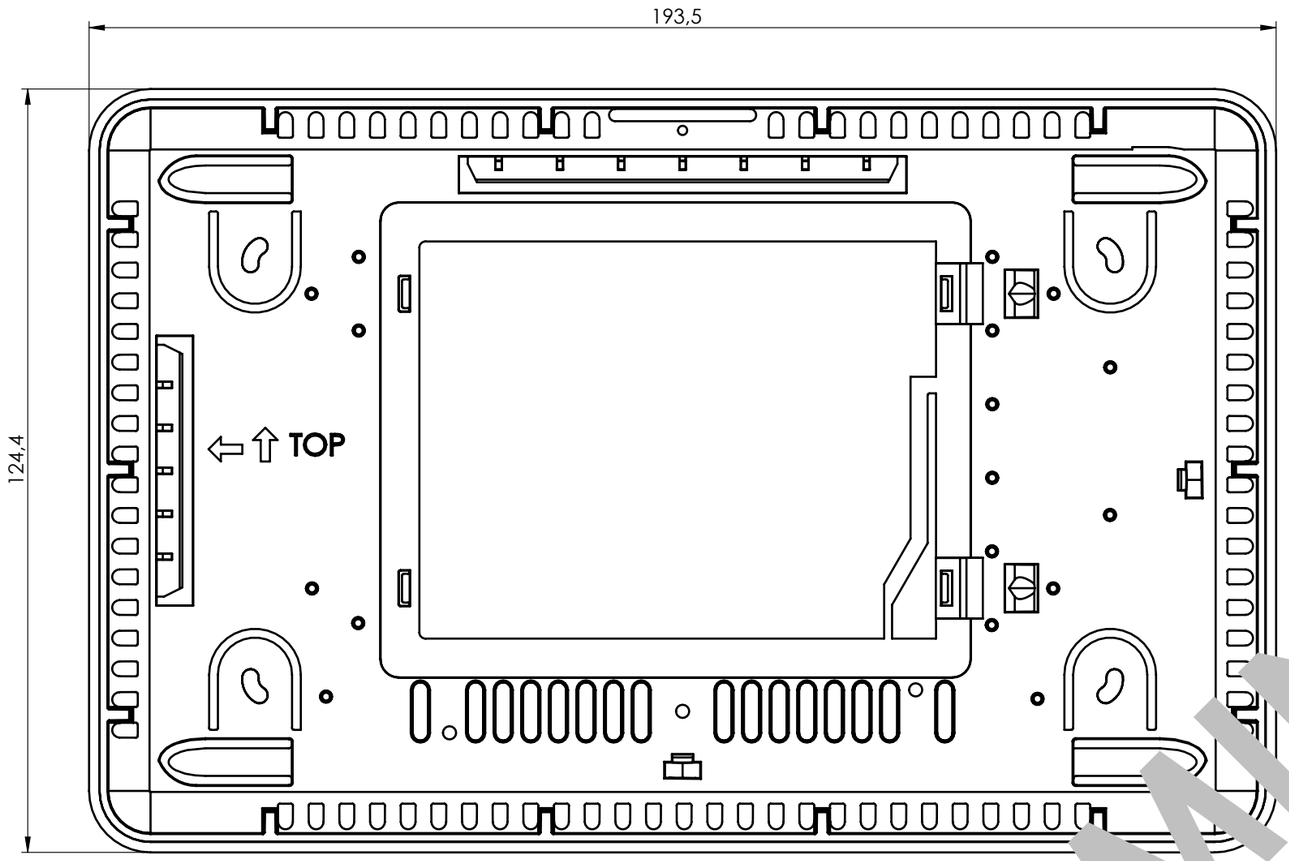

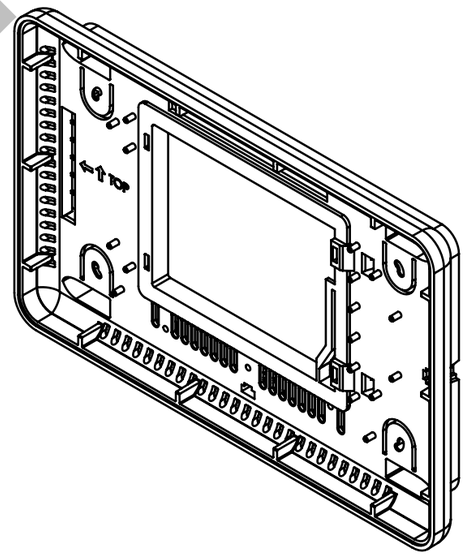

PRELIMINARY

General Tolerance UNI EN 22768/1 Media (m)						Sheet:
from 0.5 to 3		from 3 to 6	from 6 to 30	from 30 to 120	from 120 to 400	1
± 0.1		± 0.1	± 0.2	± 0.3	± 0.5	
Scale: 1:1	IM: --	Drawed: D.S.	Checked: R.N.	Date: 25/09/2025	Material: Materiale <non specificato>	Process:
Dimension in mm		The present drawing cannot be reproduced or comunicated to 3d parties, even partially, without the authorization of ITALTRONIC Srl. Italtronic reserves to protect its own rights according to the law.	Replaces the: --	Derived from:	Weight: 415.75 gr	Cod. Mold: --

italtronic
enclosures for electronics
italtronic.com

Description:
CONTENITORE DOMOPI 7 PER RASPBERRY PI TOUCH DISPLAY2
ENCLOSURE DOMOPI 7 RASPBERRY Pi TOUCH DISPLAY 2

Drawing nr.: **2_050_00078**

Rev.: -

A3